allow the curved section of the chamber wall to be produced. Once this has been done, the head can be bored to accept the inserts for the larger valves. The valve sizes to use are 1.125in exhaust and 1.312in inlet. Using this head, together with all the rest of the engine up to full race specification will produce outputs of 114bhp.

Heads for the bigger Chrysler (Rootes) engines

Since the days when Sunbeam Rapiers were top rally cars, little attention seems to have been directed towards tuning them. The engine used in the Rapier and Alpine is, in fact, quite a good motor, but before any worthwhile gains in power can be achieved, it seems one must develop a sound chamber shape. The way to modify aluminium heads for the 1,500cc, 1,600cc and 1,725cc engines is as shown in Fig. 79. This will apply to all aluminium heads except the Holbay developed head as fitted to the H120 Rapier. Little improvement can be made to the Holbay head without extensive work, so the best plan is to smooth out ports and chambers and leave it at that.

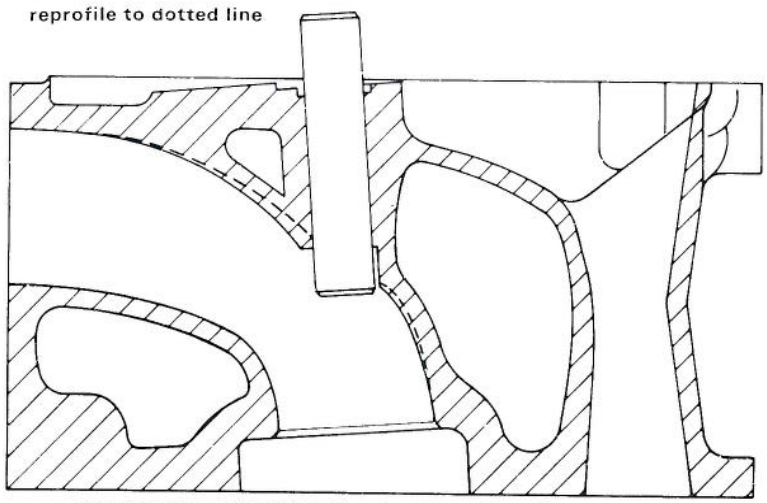

Modified inlet port for Chrysler 1500, 1600 and 1725 alloy heads

The cast iron heads of the larger Chrysler (Rootes) engines are of basically differing designs from the alloy ones. These should be modified as shown in Figs. 80 and 81. The limiting factor for all these heads as far as skimming is concerned is the tapped holes along the base of the head into which the securing screws for the tappet chest cover pass. When skimming the head, we must avoid breaking into

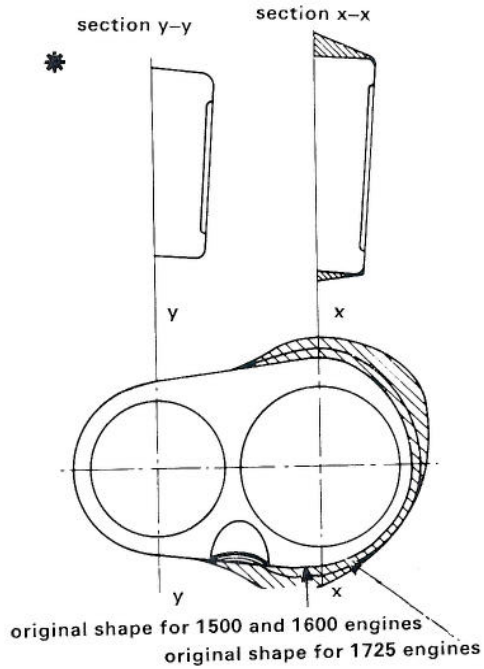

Fig 79 Modified chamber shape for Chrysler 1500, 1600 and 1725 alloy heads

Fig 80 Chamber shape for 1390 Minx head

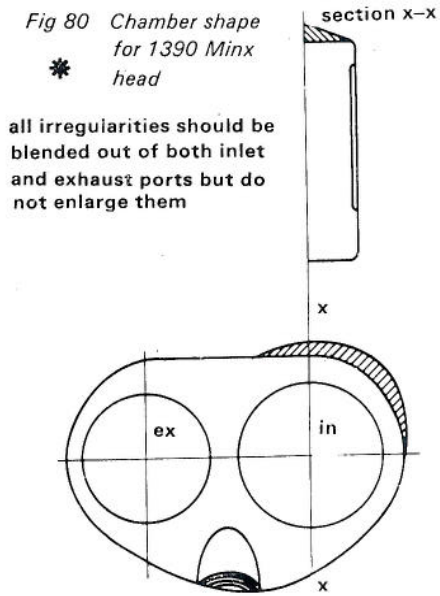

these holes. The amount that can be taken off is usually between 0.060in and 0.075in. The power increase from these heads, both cast iron and aluminium, is quite marked. To put a figure to it we can achieve between 11–15bhp, depending upon the capacity of the engine.

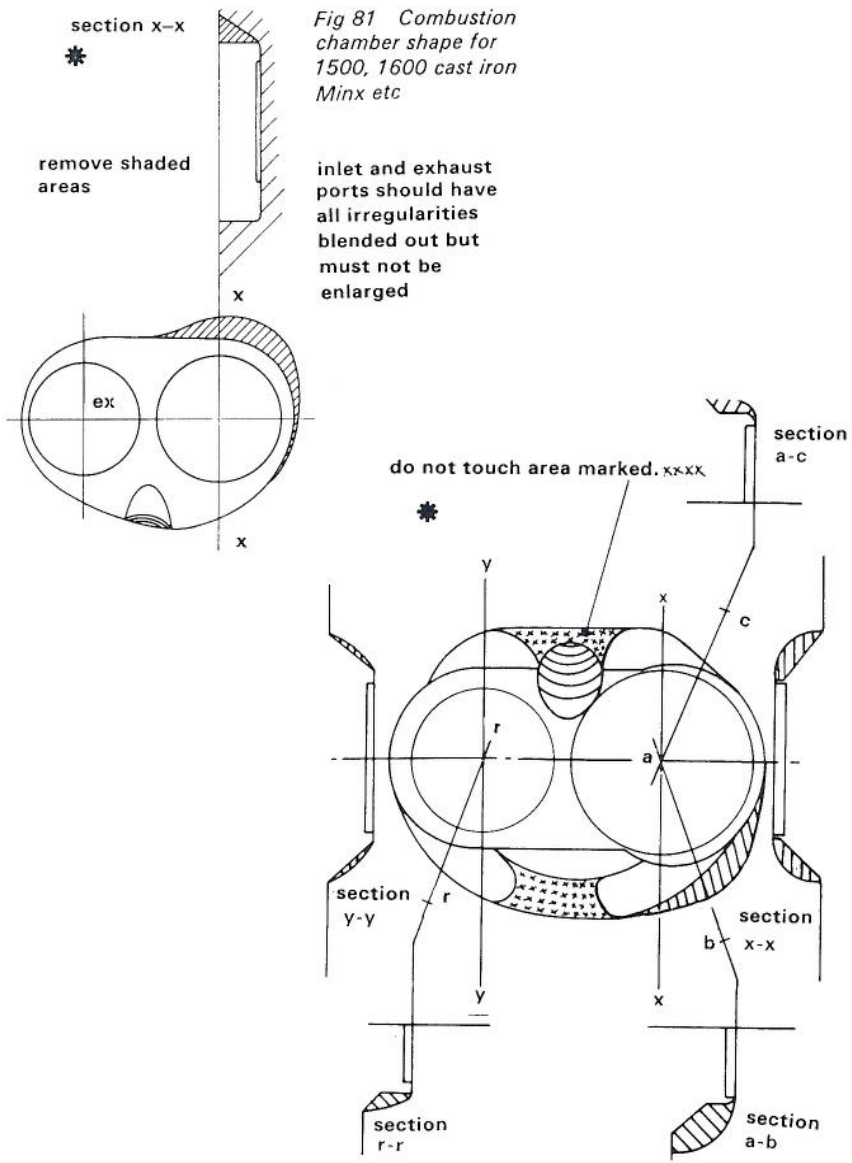

Fig 81 Combustion chamber shape for 1500, 1600 cast iron Minx etc

Triumph heads 1600 and early 2 litre engines

The 1,600cc and early 2,000cc engines, as fitted to Mk. 1 Triumph 2000, 1600 Vitesse and Mk. 1 2 litre Vitesse, have a different head casting from the Mk. 2 versions and 2.5 litre. The modifications to the Mk. 1 type of head is as shown in Fig. 82. When modifying this head for use with standard size valves, we must not enlarge the inlet ports any more than is necessary to achieve a smooth profile as they are too big as standard. Once the head has been reshaped and polished it can be skimmed by up to 0.080in to raise the CR. A head modified as per

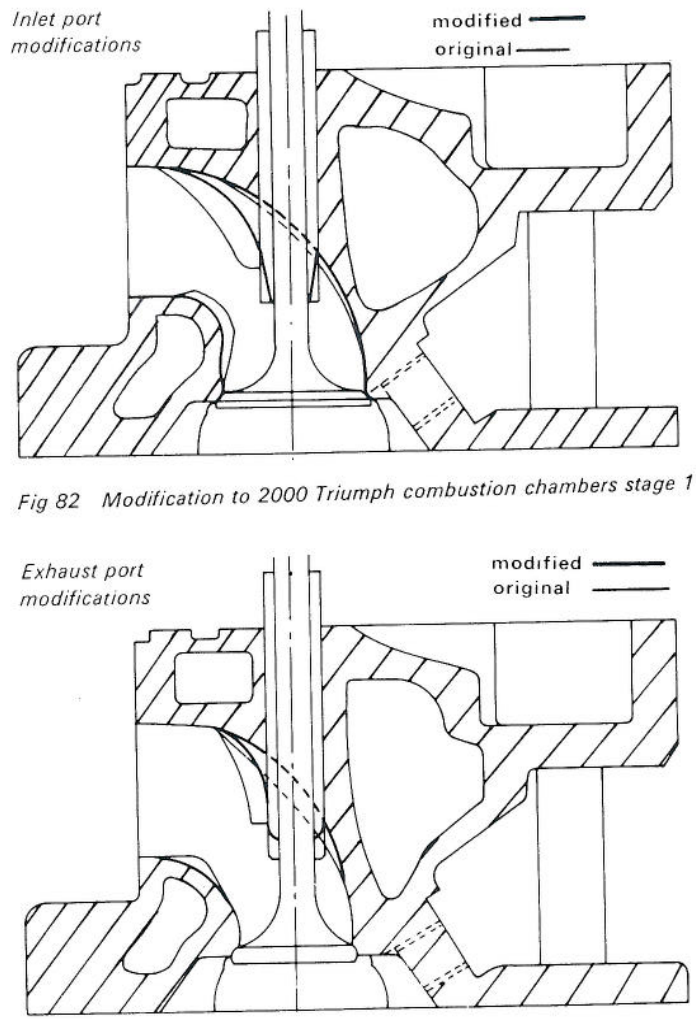

Fig 82 Modification to 2000 Triumph combustion chambers stage 1

Fig 79 Modified chamber shape for Chrysler 1500, 1600 and 1725 alloy heads

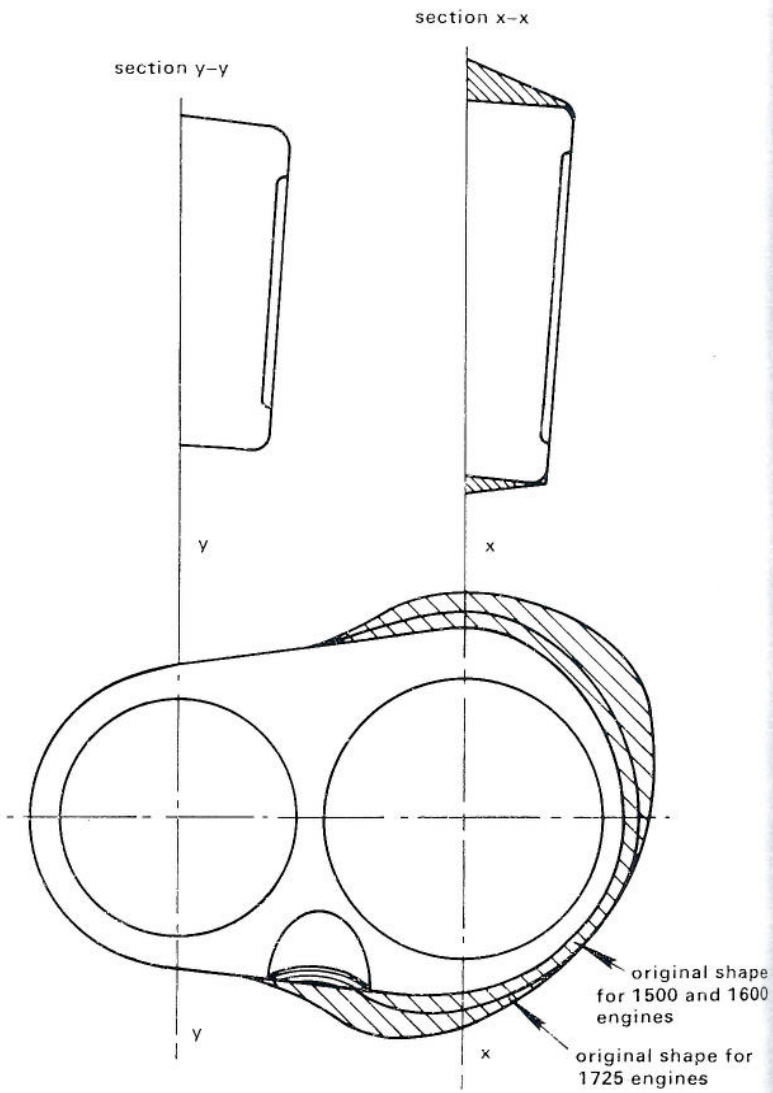

Reproduced from Page 137

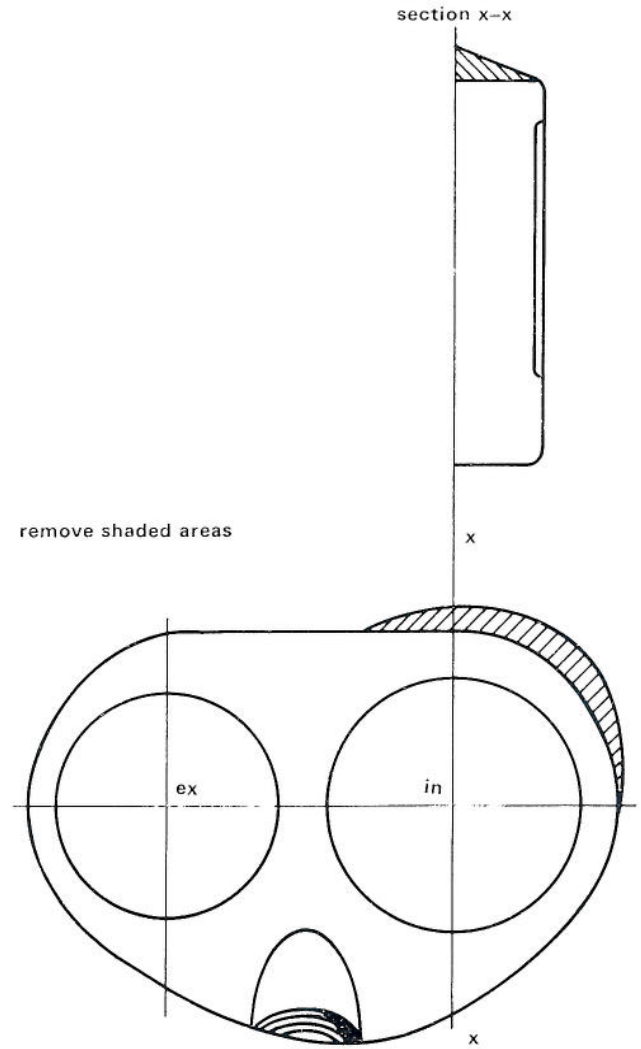

inlet and exhaust ports should have all irregularities blended out but must not be enlarged

Fig 80 Chamber shape for 1390 Minx head